BUX98APW

HIGH VOLTAGE NPN POWER TRANSISTOR

- STMicroelectronics PREFERRED SALESTYPE
- NPN TRANSISTOR
- HIGH VOLTAGE CAPABILITY
- HIGH CURRENT CAPABILITY
- FAST SWITCHING SPEED

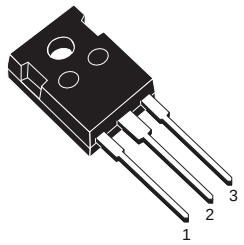

TO-247

APPLICATIONS

- HIGH FREQUENCY AND EFFICENCY CONVERTERS
- LINEAR AND SWITCHING INDUSTRIAL EQUIPMENT

DESCRIPTION

The BUX98APW is a silicon Multiepitaxial Mesa NPN transistor in TO-247 plastic package. It is intended for use in industrial applications from single and three-phase mains operation.

INTERNAL SCHEMATIC DIAGRAM

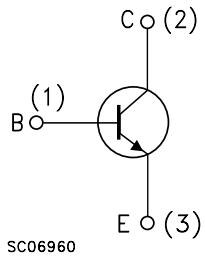

ABSOLUTE MAXIMUM RATINGS

Symbol	Parameter	Value	Unit
V_{CER}	Collector-Emitter Voltage (R_{BE} = ≤ 10 Ω)	1000	V
V_{CES}	Collector-Base Voltage (V_{BE} = 0)	1000	V
V_{CEO}	Collector-Emitter Voltage (I_B = 0)	450	V
V_{EBO}	Emitter-Base Voltage (I_C = 0)	7	V
I_C	Collector Current	24	A
I_{CM}	Collector Peak Current (tp < 5 ms)	36	A
I_B	Base Current	5	A
I_{BM}	Base Peak Current (t_p < 5 ms)	8	A
P_{tot}	Total Power Dissipation at T_{case} < 25 ^oC	200	W
T_{stg}	Storage Temperature	-65 to 150	^oC
T_j	Max Operating Junction Temperature	150	^oC

Obsolete Product(s) - Obsolete Product(s)

THERMAL DATA

$R_{thj-case}$	Thermal Resistance Junction-case Max	0.63	$^oC/W$

ELECTRICAL CHARACTERISTICS (T_{case} = 25 ^oC unless otherwise specified)

Symbol	Parameter	Test Conditions	Min.	Typ.	Max.	Unit
I_{CER}	Collector Cut-off Current (R_{BE} = 5 Ω)	V_{CE} = 1000 V V_{CE} = 1000 V T_C = 125 ^oC			200 2	µA mA
I_{CES}	Collector Cut-off Current (V_{BE} = 0)	V_{CE} = 1000 V V_{CE} = 1000 V T_C = 125 ^oC			200 2	µA mA
I_{CEO}	Collector Cut-off Current (I_B = 0)	V_{CE} = 450 V			2	mA
I_{EBO}	Emitter Cut-off Current (I_C = 0)	V_{EB} = 5 V			2	mA
$V_{(BR)EBO}$	Emitter-Base Breakdown Voltage (I_C = 0)	I_E = 100 mA	7			V
$V_{CEO(sus)}$*	Collector-Emitter Sustaining Voltage (I_B = 0)	I_C = 200 mA L = 25 mH	450			V
$V_{CE(sat)}$*	Collector-Emitter Saturation Voltage	I_C = 16 A I_B = 3.2 A			1.2	V
$V_{BE(sat)}$*	Base-Emitter Saturation Voltage	I_C = 16 A I_B = 3.2 A			1.5	V
t_{on} t_s t_f	RESISTIVE LOAD Turn-on Time Storage Time Fall Time	V_{CC} = 150 V I_C = 16 A I_{B1} = - I_{B2} = 3.2 A			1 3 0.8	µs µs µs

* Pulsed: Pulse duration = 300 µs, duty cycle = 1.5 %

TO-247 MECHANICAL DATA

DIM.	mm			inch		
	MIN.	TYP.	MAX.	MIN.	TYP.	MAX.
A	4.7		5.3	0.185		0.209
D	2.2		2.6	0.087		0.102
E	0.4		0.8	0.016		0.031
F	1		1.4	0.039		0.055
F3	2		2.4	0.079		0.094
F4	3		3.4	0.118		0.134
G		10.9			0.429	
H	15.3		15.9	0.602		0.626
L	19.7		20.3	0.776		0.779
L3	14.2		14.8	0.559		0.582
L4		34.6			1.362	
L5		5.5			0.217	
M	2		3	0.079		0.118

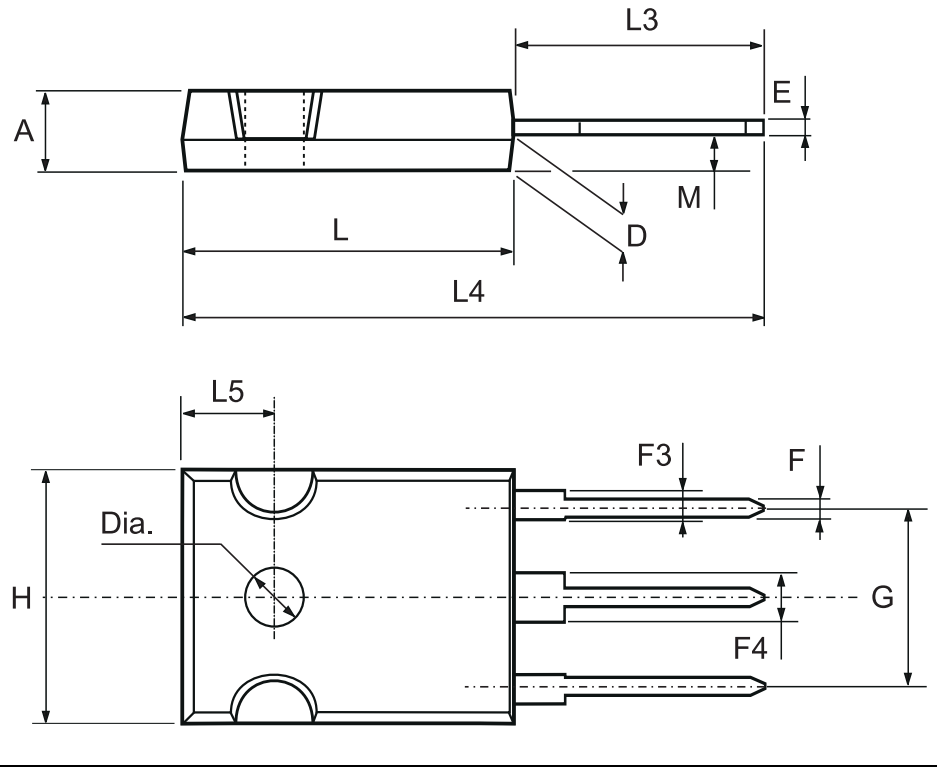

Information furnished is believed to be accurate and reliable. However, STMicroelectronics assumes no responsibility for the consequences of use of such information nor for any infringement of patents or other rights of third parties which may result from its use. No license is granted by implication or otherwise under any patent or patent rights of STMicroelectronics. Specification mentioned in this publication are subject to change without notice. This publication supersedes and replaces all information previously supplied. STMicroelectronics products are not authorized for use as critical components in life support devices or systems without express written approval of STMicroelectronics.

The ST logo is a trademark of STMicroelectronics

© 2002 STMicroelectronics – Printed in Italy – All Rights Reserved

STMicroelectronics GROUP OF COMPANIES

Australia - Brazil - Canada - China - Finland - France - Germany - Hong Kong - India - Israel - Italy - Japan - Malaysia - Malta - Morocco - Singapore - Spain - Sweden - Switzerland - United Kingdom - United States.

http://www.st.com